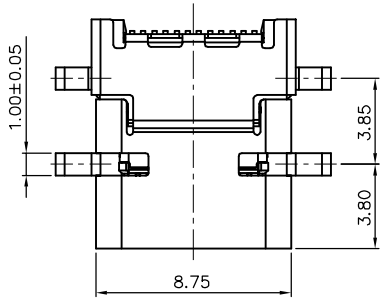

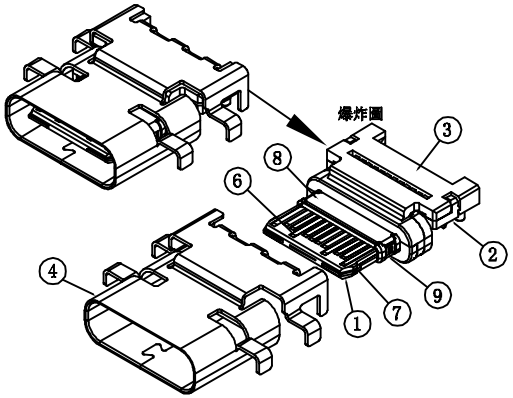

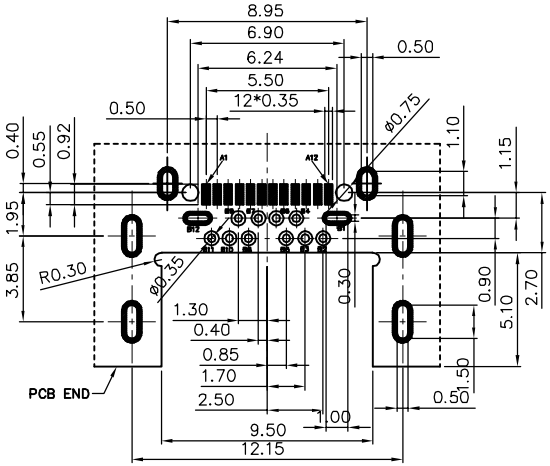

PCB LAYOUT (RECOMMENDED)
(Tol: ±0.05)

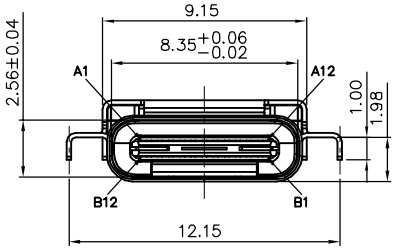

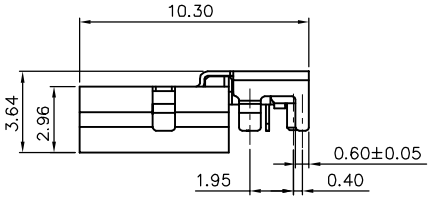

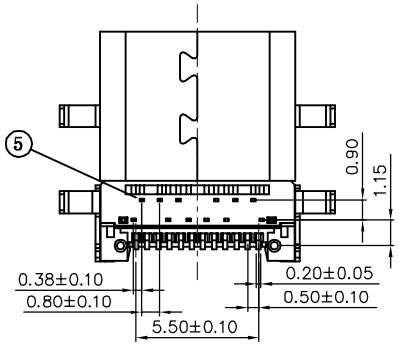

SPECIFICATION
MATERIAL
See drawing
STANDARD DATA
Rating current: 1.5A
ELECTRICAL
Insulator resistance: 100M ohms Min
Withstanding voltage: 100 VAC / minute
Contact resistance: 40 m ohms Max
MECHANICAL
Mating force: 5~20N.
Unmating force: 8~20N.
Durability: 10000 cycles Min.

ITEM	PARTS NAME	Q'TY	MATERIAL	FINISH/REMARK
1	Insermold housing	1	SYNTHETIC RESIN	Black
2	12pin Insermold-(1)	1	SYNTHETIC RESIN	Black
3	12pin Insermold-(2)	1	SYNTHETIC RESIN	Black
4	SHELL	1	STAINLESS	Ni:50u" Min
5	12pin Contact-(DIP)	12	COPPER ALLOY	Gold flash on contact area 100u" Tin on solder tails, base Nickel:50u"
6	12pin Contact-(SMT)	12	COPPER ALLOY	Gold flash on contact area 100u" Tin on solder tails, base Nickel:50u"
7	Shield SHELL	1	STAINLESS	base Nickel:50u" Min Tin:80u" Min Over All
8	Ground plate-top	1	STAINLESS	Ni:50u" Min
9	Ground plate-bottom	1	STAINLESS	Ni:50u" Min

PIN	Signal Name		PIN	Signal Name
A1	GND		B12	GND
A2	SSTXp1		B11	SSRXp1
A3	SSTXn1		B10	SSRXn1
A4	VBUS		B9	VBUS
A5	CC1		B8	SBU2
A6	Dp1		B7	Dn2
A7	Dn1		B6	Dp2
A8	SBU1		B5	CC2
A9	VBUS		B4	VBUS
A10	SSRXn2		B3	SSTXn2
A11	SSRXp2		B2	SSTXp2
A12	GND		B1	GND

UNITS: mm		CSCONN	CSCONN PRECISE ELECTRONICS CO.,LTD		
GENERAL TOLERANCE		PART NO.(INTENDED USE) CUS31122003005	TITLE: USB TYPE C FEMALE L=10.3MM 沉板式		
X.° ±5°	0.X±0.25	APPD:	DWG NO. USB		
X.1±2°	0.XX±0.2	CHKD: Skila	SCALE	SHEET	REV
XX.±1°	0.XXX±0.1	DR: Kitty	1:1	1 OF 1	A