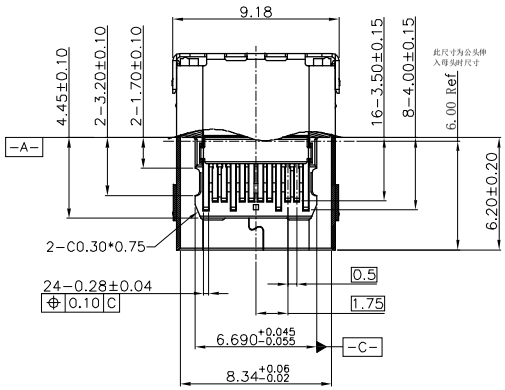

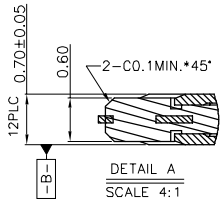

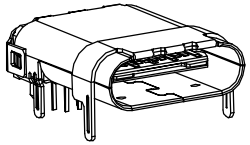

NOTE:
1.MATERIAL:
1.1 INSULATOR: HIGH TEMPERATURE PLASTIC UL 94 V-0;
1.2 CONTACT: COPPER ALLOY(T=0.15mm)
1.3 SHELL:STAINLESS STEEL(T=0.20mm)
2.ELECTRICAL CHARACTERISTICS;
2.1 CONTACT RESISTANCE: 40mΩ Max FOR INITIAL. 10mΩ CHANGE AFTER TEST. MEASURE AT 20mV, 100mA.
2.2 CONTACT CURRENT RATING: 5A FOR VBUS PIN; 1.25A FOR VCONN PIN.
2.3 DIELECTRIC WITHSTANDING VOLTAGE: 100V AC R.M.S.
2.4 INSULATION RESISTANCE 100MΩ Min
2.5 OPERATING TEMPERATURE: -40°C ~ 85°C
3 MECHANICAL CHARACTERISTICS:
3.1 MATING FORCE: 5~20 N.
3.2 UNMATED FORCE: 8~20N AFTER TEST
3.3 DURABILITY: 10,000 CYCLES
4.PLATING
4.1 TERMINAL CONTACT: (SEE TAB) GOLD PLATING ALL OVER 50u" Min NICKEL AND 80u"Min Tin ALL OVER 50u" Min NICKEL ON SOLDER AREA
4.2 SHELL: 50u" Min. NICKEL ALL OVER,

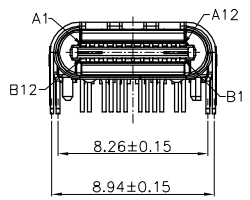

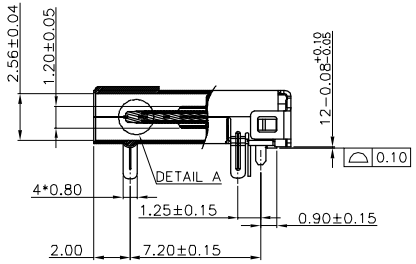

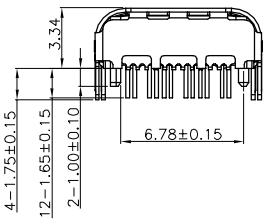

A1	A2	A3	A4	A5	A6	A7	A8	A9	A10	A11	A12
GND	TX1+	TX1-	VBUS	CC1	D+	D-	SBU1	VBUS	RX2-	RX2+	GND
GND	RX1+	RX1-	VBUS	SBU2	D-	D+	CC2	VBUS	TX2-	TX2+	GND
B12	B11	B10	B9	B8	B7	B6	B5	B4	B3	B2	B1

INTERFACE DEFINITION

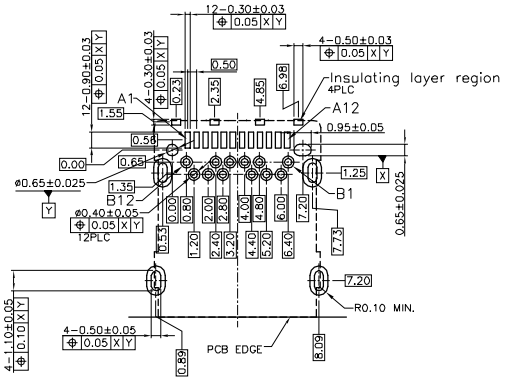

RECOMMENDED PCB LAYOUT (COMPONENT SIDE)

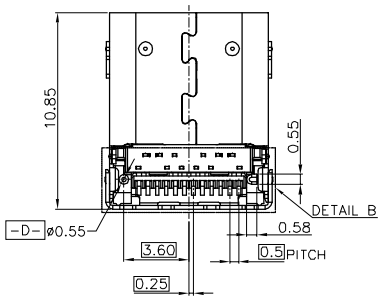

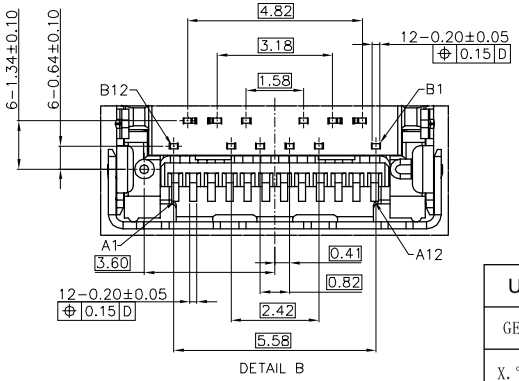

UNITS: mm	
GENERAL TOLERANCE	
X.° ±5°	0.X±0.25
X.1±2°	0.XX±0.2
XX. ±1°	0.XXX±0.1

CSCONN

CSCONN PRECISE ELECTRONICS CO.,LTD

PART NO.(INTENDED USE) CUS31120701001

TITLE: USB TYPE C FEMALE DIP L=10.85MM

APPD:

DWG NO. USB

CHKD: Skila

DR: Kitty

SCALE	SHEET	REV
1:1	1 OF 1	A