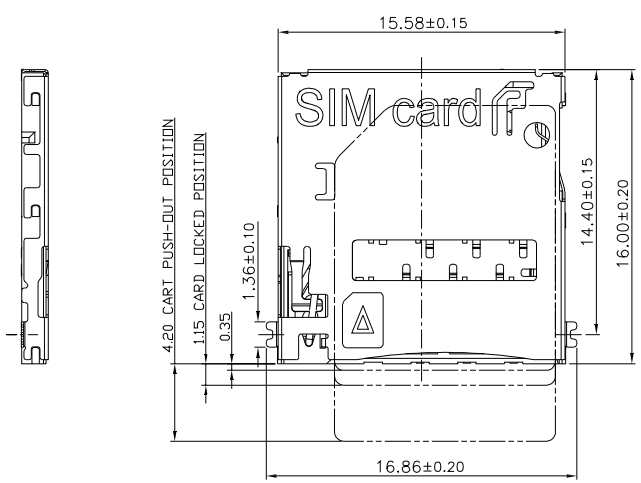

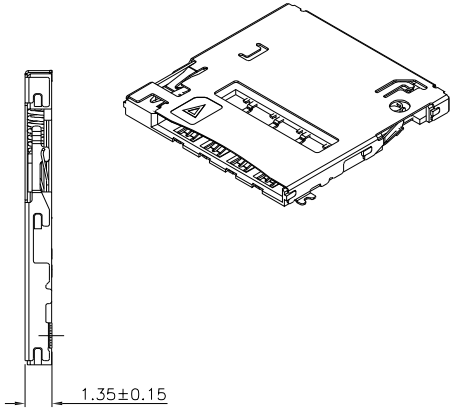

NOTES:
1.HOUSING MATERIAL: LCP UL94V_0 BLACK.
2.TERMINAL MATERIAL: COPPER ALLOY. GOLD FLASH.
3.METAL SHELL: SUS304, NICKEL PLATED.

SPECIFICATIONS:
1. ELECTRICAL CHARACTERISTICS:
   1−1. RATING CURRENT: 1.0A
   1−2. CONTACT RESISTANCE: 100mΩ MAX.
   1−3. INSULATION RESISTANCE: 500MΩ MIN.
2. MECHANICAL CHARACTERISTICS:
   2−1. INSERTION FORCE : 2.0KGF MAX.
   2−2. WITHDRAWAL FORCE : 0.1KGF MIN.
3. DURABILITY: 5,000 CYCLES(MIN).
4. OPERATING TEMPERATURE RANGE:−20°C~+65°C

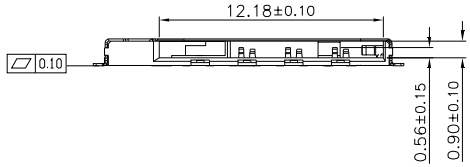

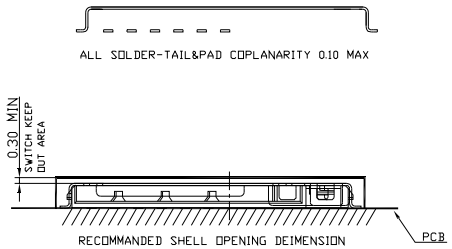

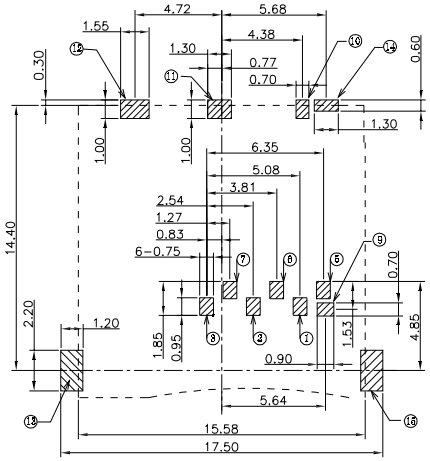

RECOMMANDED PCB LAYOUT
GENERAL TOLERANCE±0.05

Connector pin Assignment

No.	Pin Name	Description
①	C1	Vcc of SIM
②	C2	RST of SIM
③	C3	CLK of SIM
⑤	C5	GND of SIM
⑥	C6	Vpp of SIM
⑦	C7	I/O of SIM
⑨	SW	Detection Switch
⑩−⑭	GND	Shell Ground

SIM Card Pin Assignment

Pin No.	Name
C1	Vcc
C2	RST
C3	CLK
C4	Rrserved
C5	GND
C6	Vpp
C7	I/O
C8	Reserved

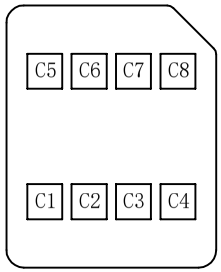

SIM CARD PAD LAYOUT

UNITS: mm		CSCONN	CSCONN PRECISE ELECTRONICS CO.,LTD		
GENERAL TOLERANCE		PART NO.(INTENDED USE) CSI06127135002	TITLE: MICRO SIM SOCKET PUSH 1.35H SMT		
X.° ±5°	0.X±0.25	APPD:	DWG NO. SIM CARD		
X.1±2°	0.XX±0.2	CHKD: Skila	SCALE	SHEET	REV
XX. ±1°	0.XXX±0.1	DR: Kitty	1:1	1 OF 1	A