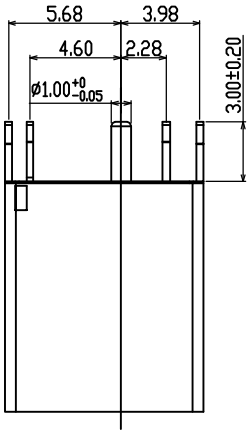

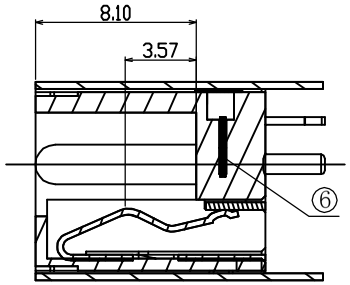

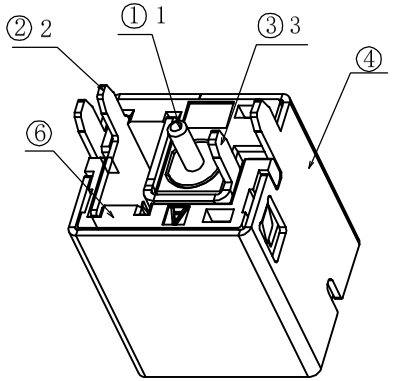

SPECIFICATION

1. Rating : DC 24V 3A;
2. Contact resistance: ≤0.03Ω;
3. Insulation resistance: ≥100MΩ (DC250V);
4. Withstand voltage: 500VAC ;
5. Insertion and extraction force: 5-40N;
6. life test: 5,000 cycles。

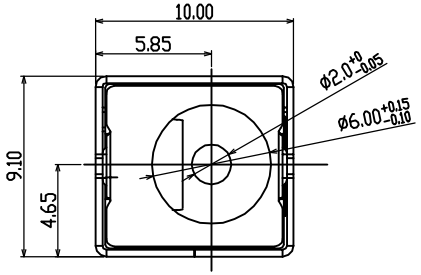

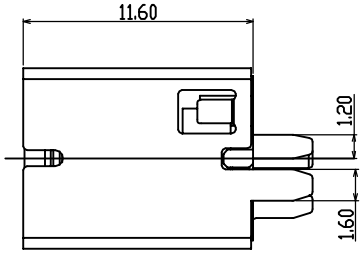

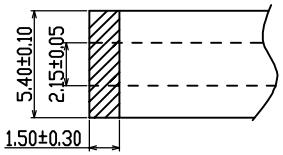

MATE PLUG

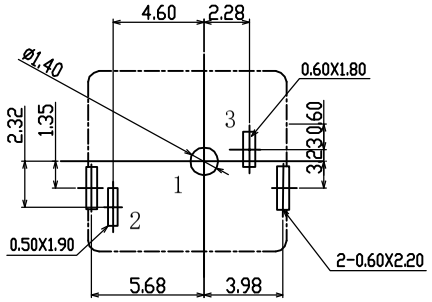

PCB LAYOUT TOP VIEW

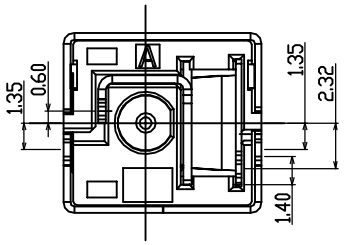

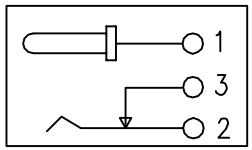

CIRCUIT DIAGRAM

No.	PART NAME	QTY	MATERIAL (THICK, COLOR)	REMARK
⑥	HOUSING	1	PA-9T (Black)	
⑤	TERMINAL	1	SPCC t=0.30	Ni-Plated
④	TERMINAL	1	BRSS t=0.35	Sn-Plated
③	TERMINAL	1	BRASS t=0.40	Ag-Plated
②	TERMINAL	1	PHOSPHOR BRONZE t=0.30	Ag-Plated
①	PIN	1	H59	Ag-Plated

UNITS: mm	CSCONN	CSCONN PRECISE ELECTRONICS CO.,LTD	
GENERAL TOLERANCE	PART NO.(INTENDED USE) CD0032H	TITLE: DC JACK	
X.° ±5° / 0.X±0.3	APPD:	DWG NO. JACK	
X.1±2° / 0.XX±0.2	CHKD: Skila	SCALE 1:1	SHEET 1 OF 1 / REV A
XX.±1° / 0.XXX±0.1	DR: Kitty		
XXX.±0.5°			