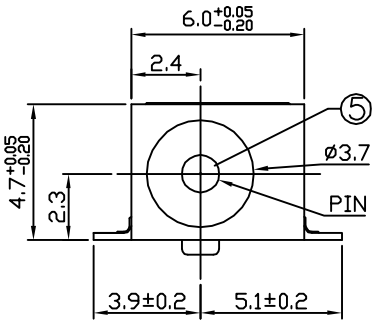

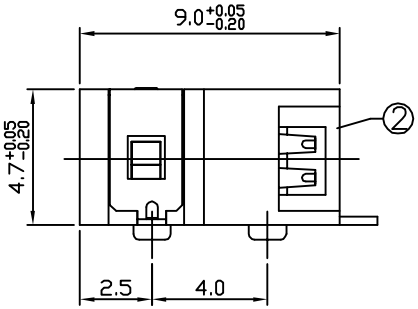

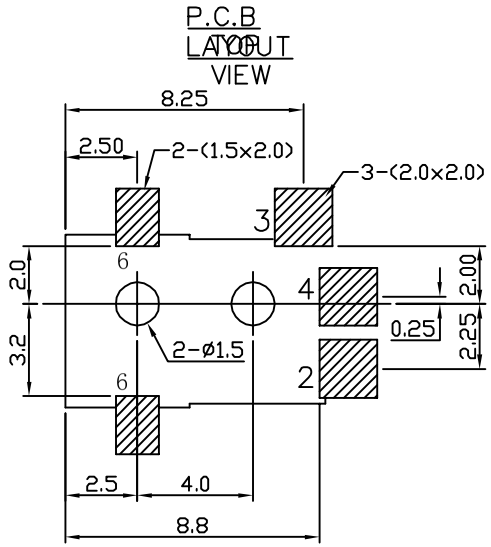

SCHEMATIC

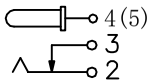

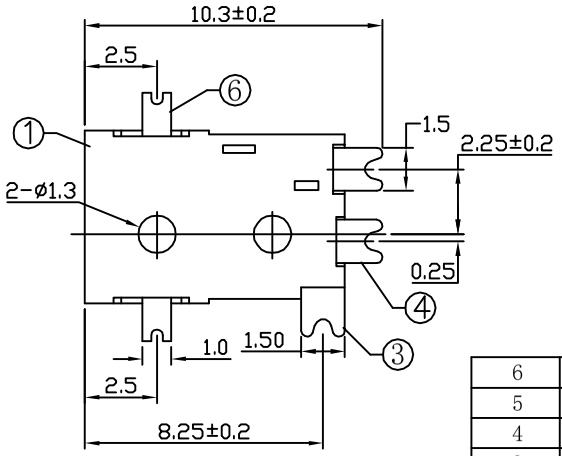

PIN	ø1.0	ø1.3
APPD.		

NO.	DESCRIPTION	QTY	MATERIAL	PLATING
6	CONTACT FOOT	1	H62 BRASS	Ag-Plating
5	PIN	1	H59 BRASS	Ni-Plating
4	CONTACT FOOT	1	H62 BRASS	Ag-Plating
3	CURVE PIECE	1	H62 BRASS	Ag-Plating
2	SPRING	1	Be-Cu	Ag-Plating
1	HOUSING	1	FR52	

SPECIFICATION

1. Rating : DC 30V 0.5A;
2. Contact resistance: ≤0.03Ω;
3. Insulation resistance: ≥100MΩ (DC250V);
4. Withstand voltage: 500VAC ;
5. Insertion and extraction force: 2-20N;
6. life test: 5,000 cycles。

UNITS: mm	
GENERAL TOLERANCE	
X.° ±5°	0.X±0.3
X.1±2°	0.XX±0.2
XX.±1°	0.XXX±0.1
XXX.±0.5°	

CSCONN

CSCONN PRECISE ELECTRONICS CO.,LTD

PART NO.(INTENDED USE) CDC-045B

TITLE: DC JACK

APPD:

DWG NO. JACK

CHKD: Skila

DR: Kitty

SCALE	SHEET	REV
1:1	1 OF 1	A